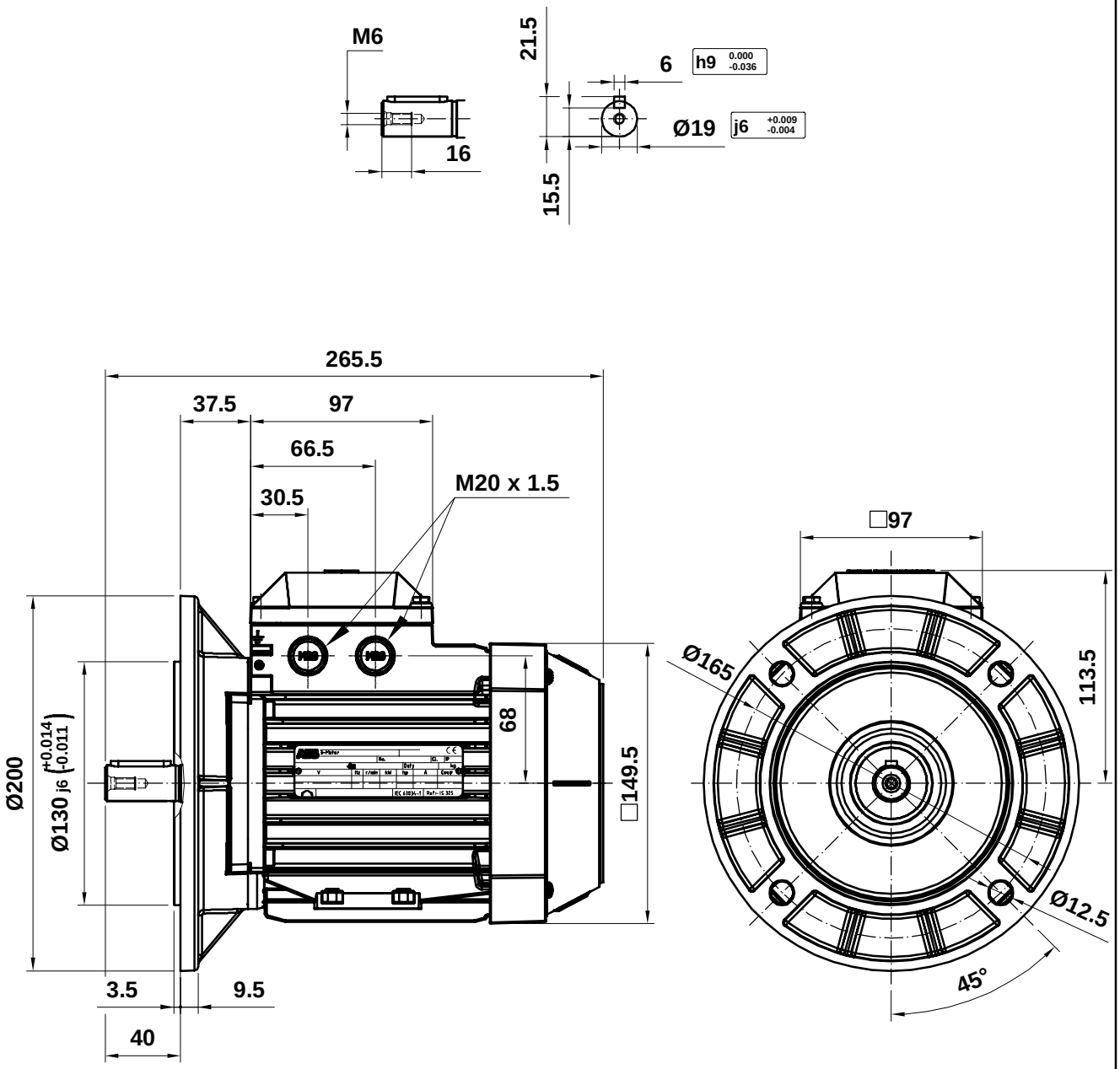

M3AA 080

Motor Dimension Print	Motor Type : M3AA 080	Document Nº : A1.5016 / 3D A2.5016

Description :

Motor flange mounted IM3001 / Motor con brida IM3001

Unit : Discrete Automation & Motion - Fáb. Motores	Issued by : ERM/J.Muñoz	Replaces : To date 2009-05-05
Date : 2012-01-26	Approved by : ERM/G.Blanes	Replaced by :

Asea Brown Boveri, S.A.

Customer Reference :

ABB